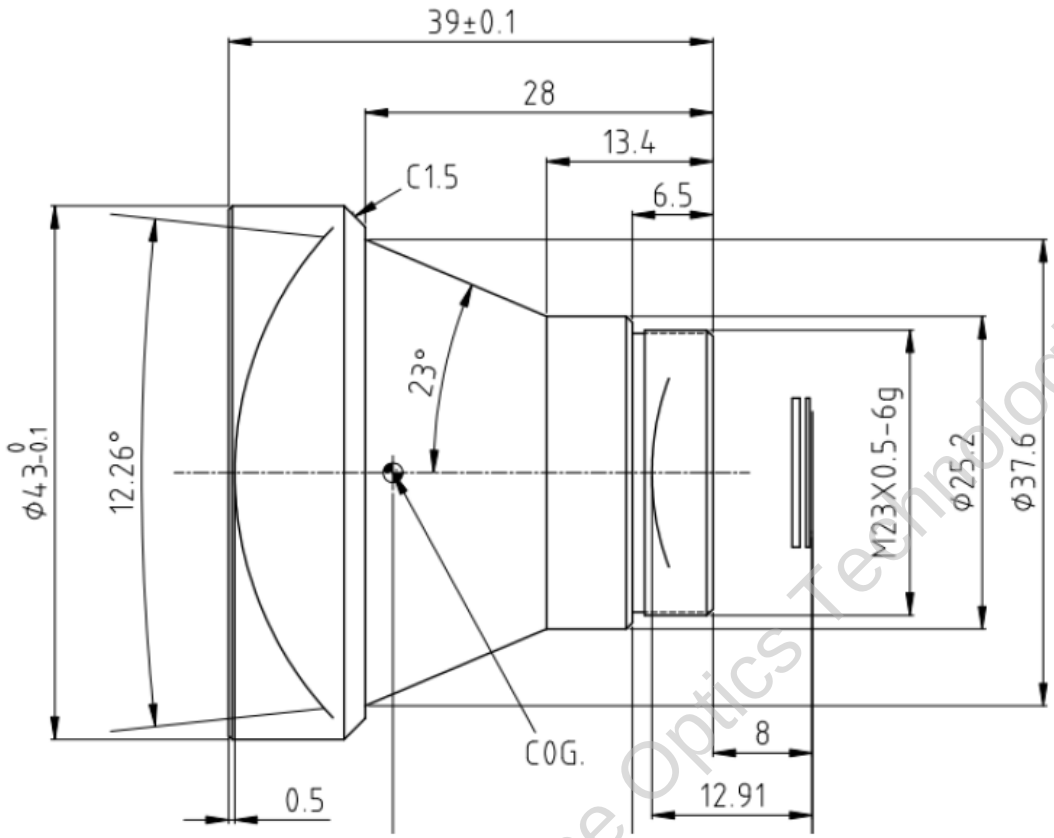


| | |
|---|---|
| Focal Length | 45mm |
| F/# | 1.2 |
| Spectral Range | 8~12μm |
| Transmittance | >89% |
| Detector | 640x512 / 12μm |
| FOV | 9.6° × 7.7° |
| Focusing Method | Athermal |
| Focus Range | 4.5m ~ ∞ |
| Mount Type | M23 x 0.5 |
| Lens Size | Ø43mm / L39mm |
| Rear Working Distance | 8mm |
| Weight | TBD |
| Coating | HD |
| Operating Temperature | -40°C ~ 60°C |
| Storage Temperature | -40°C ~ 80°C |
| IP Grade | IP67 (Front Mirror) |

Shape Optics Technologies Pte Ltd

| | | | | | |
|---|---|---|---|---|---|
| Drawing No. | NZLA45F12 | | | SOT-LW-A-45F12 | |
| | | Signature | Date | | |
| Designed by | | | | Shapeoptics | |
| Reviewed by | | | | | |
| Approved by | | | | Shape Optics Technologies Pte Ltd | Sheet 1 of 1 |