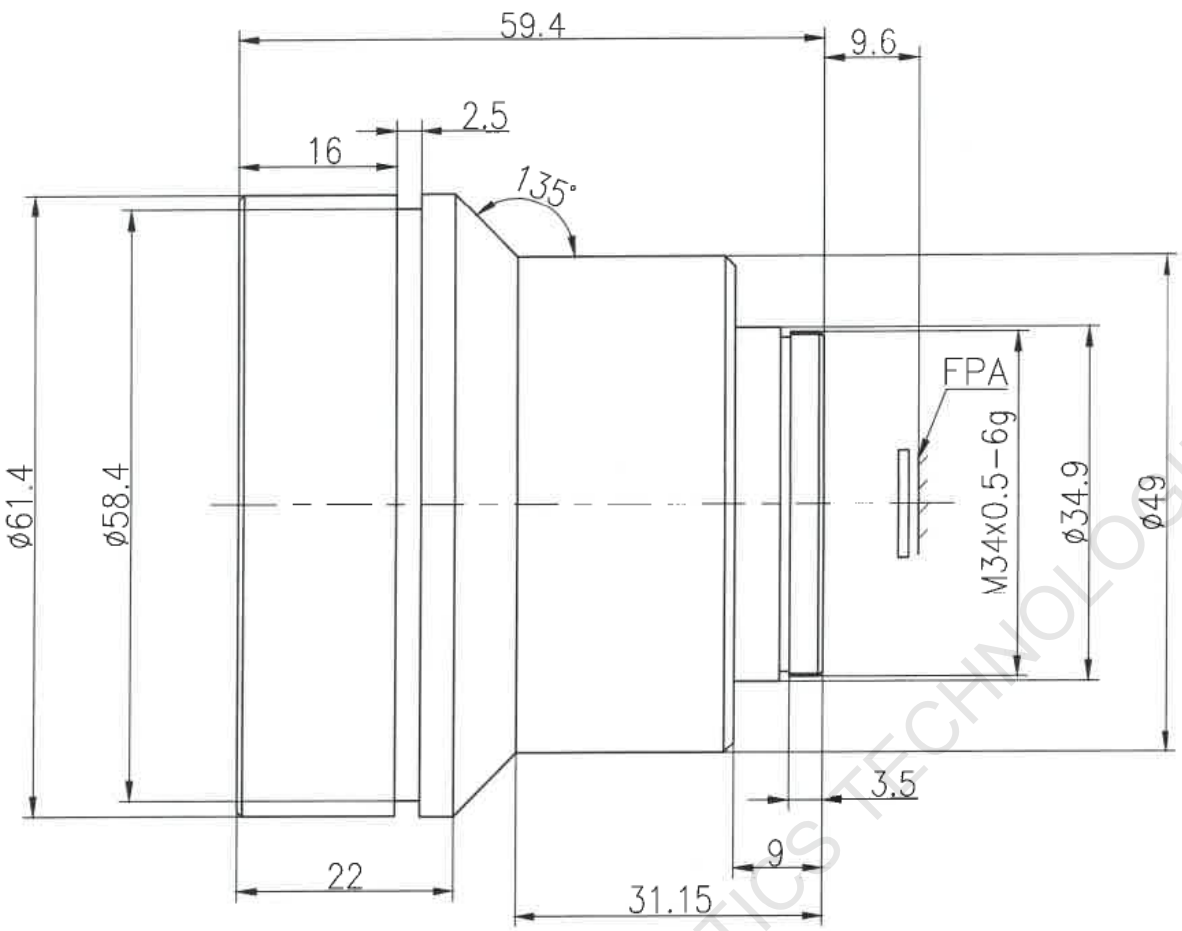

Focal Length	60mm
F/#	1.2
Spectral Range	8 ~ 12μm
Detector	640 x 512 / 12μm
FOV	7.3° x 5.8°
Transmittance	>90%
Rear Working Distance	9.6mm
Lens Size	Ø61.4mm / L59.4mm
Focus Mode	Athermalization
Focus Range	6m ~ ∞
Mount Type	M34 x 0.5 - 6g
Weight	166.5g
Operating Temperature	-40°C ~ 60°C
Storage Temperature	-40°C ~ 80°C
Front Lens Coating	HD
IP Grade (Front Lens)	IP67

SHAPE OPTICS TECHNOLOGIES PTE LTD

No.	68152			SOT-LW-A-60F1.2-612
	Name	Sign	Date	
Design				Shapeoptics
Review				
Appr.				Shape Optics Technologies Pte Ltd
Sheet 1 of 1				